SUS12.7

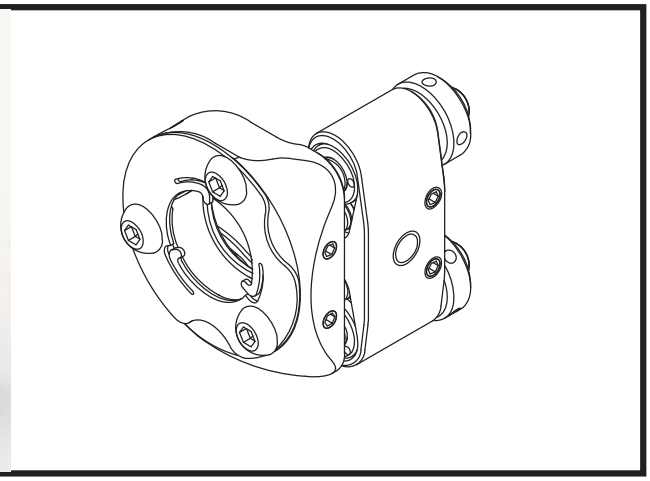

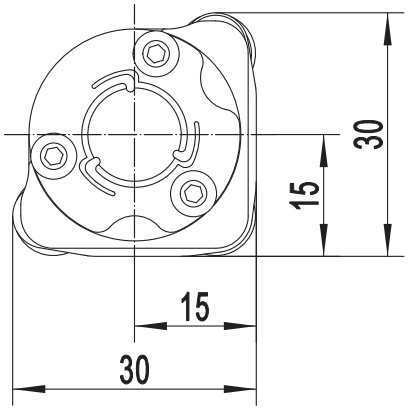
30
15
15
30

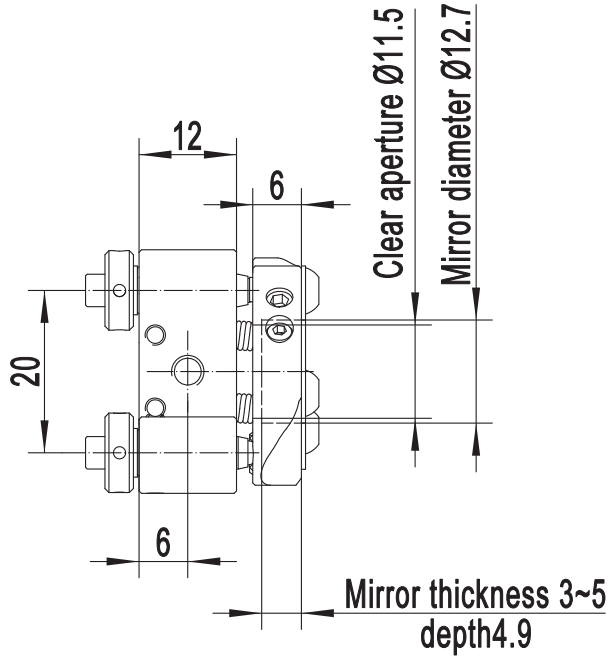
12
6
Clear aperture Ø11.5
Mirror diameter Ø12.7
20
6
Mirror thickness 3~5
depth4.9

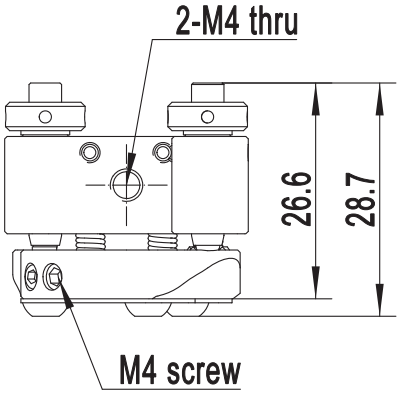
2-M4 thru
26.6
28.7
M4 screw