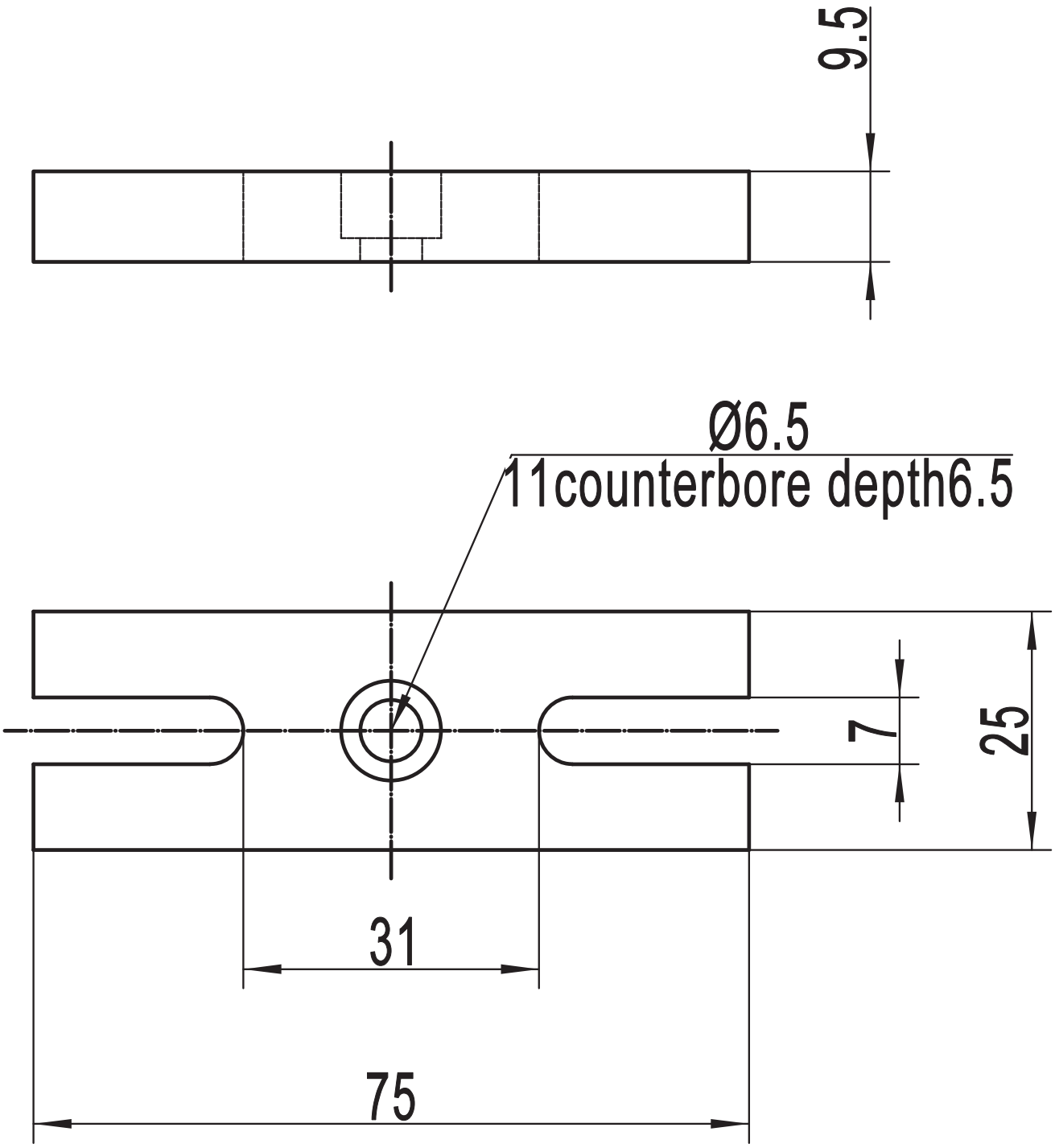
9.5
Ø6.5
11counterbore depth6.5
7
25
31
75