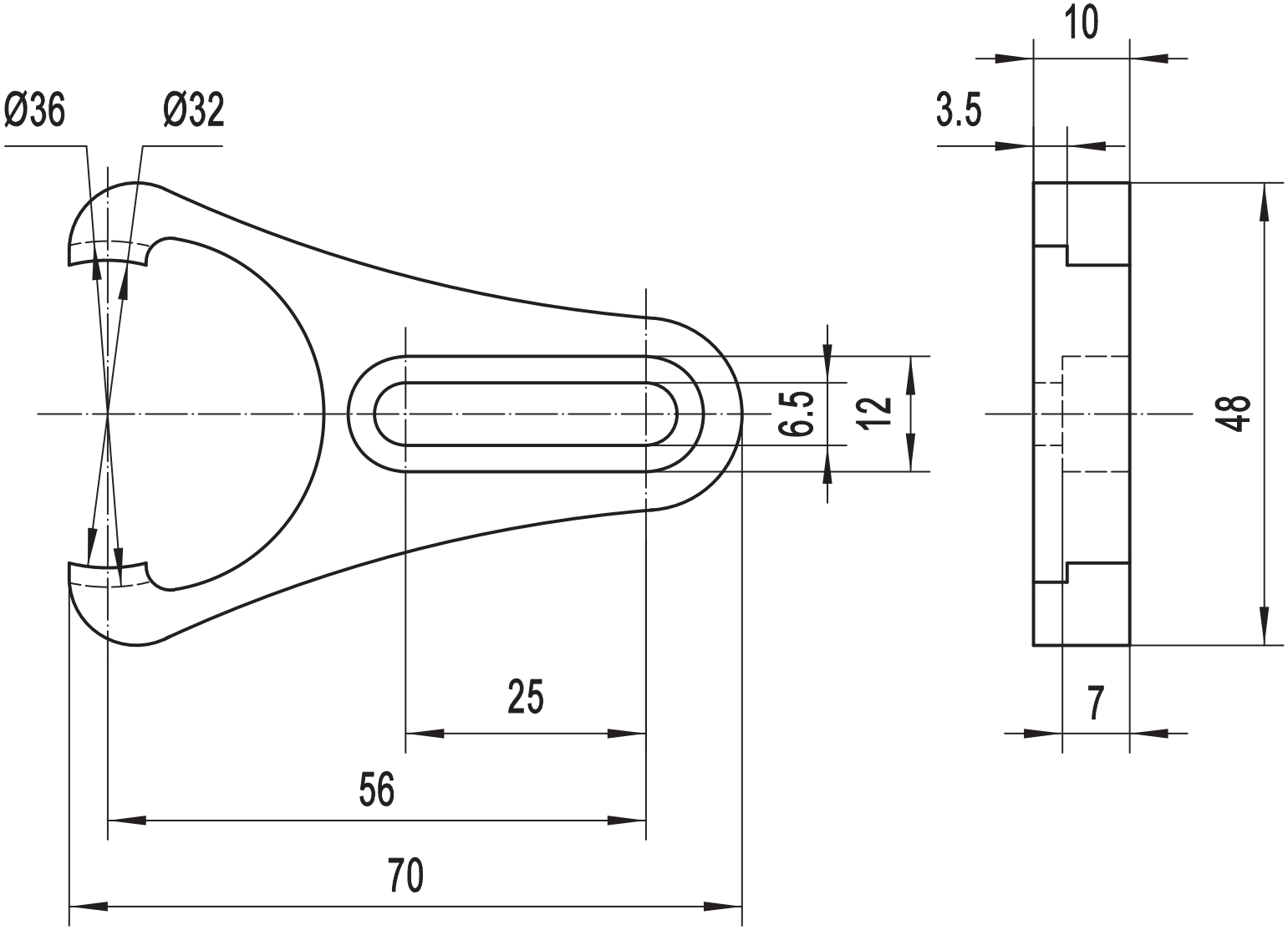
Ø36
Ø32
6.5
12
25
56
70
10
3.5
48
7