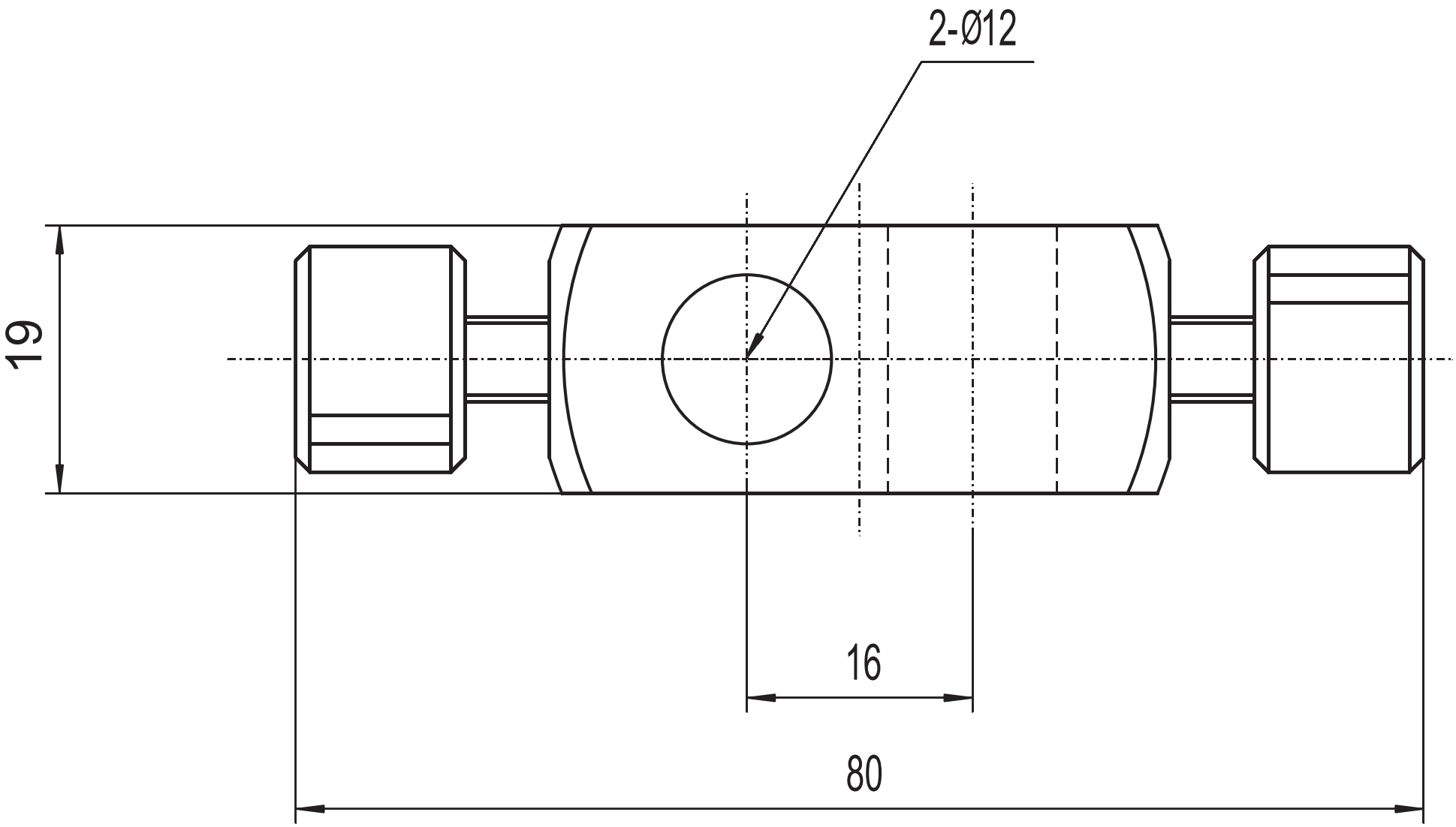
2-Ø12
19
16
80