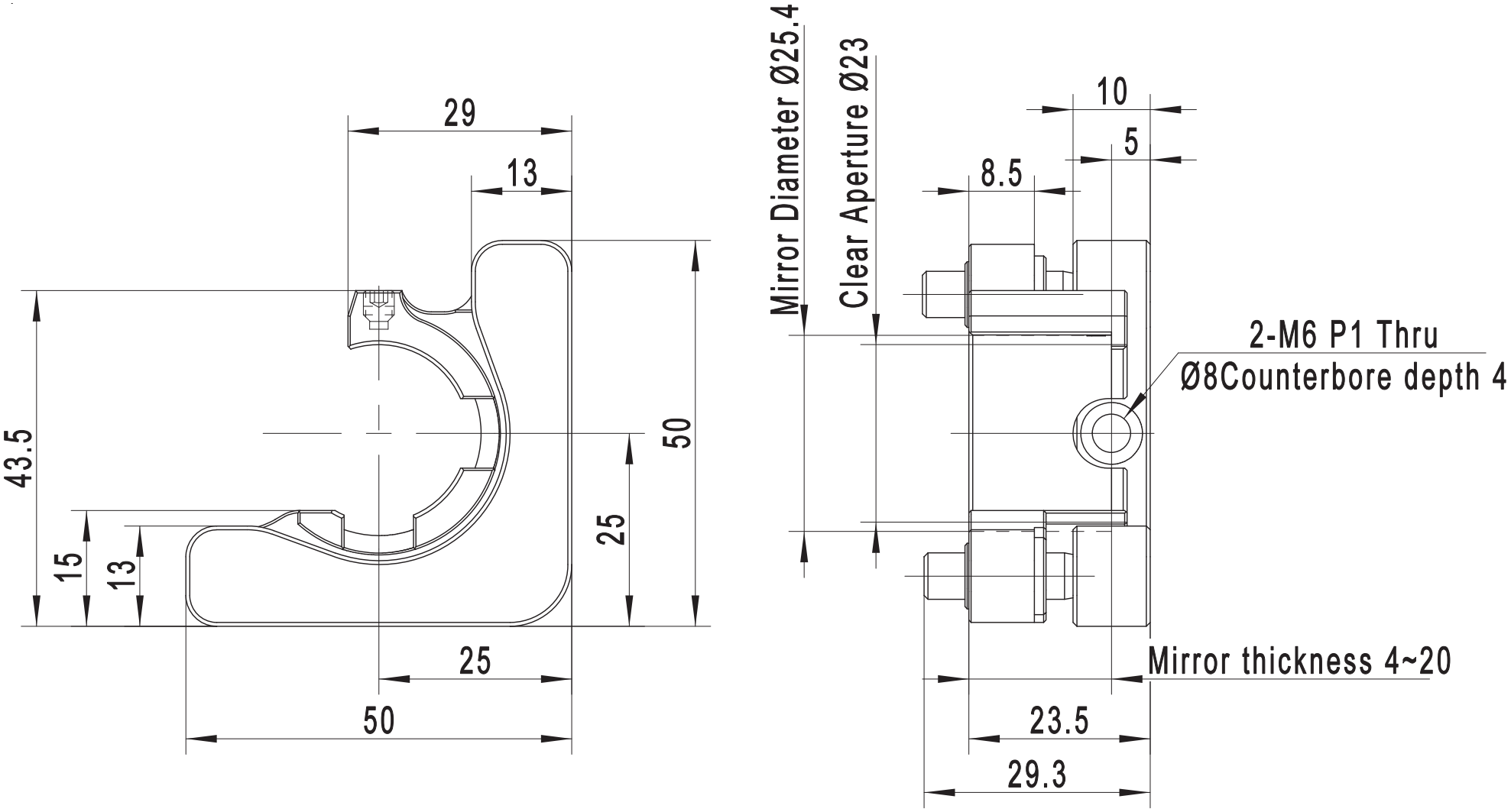
29
13
43.5
15
13
50
25
25
50
Mirror Diameter Ø25.4
Clear Aperture Ø23
10
5
8.5
2-M6 P1 Thru
Ø8Counterbore depth 4
Mirror thickness 4~20
23.5
29.3