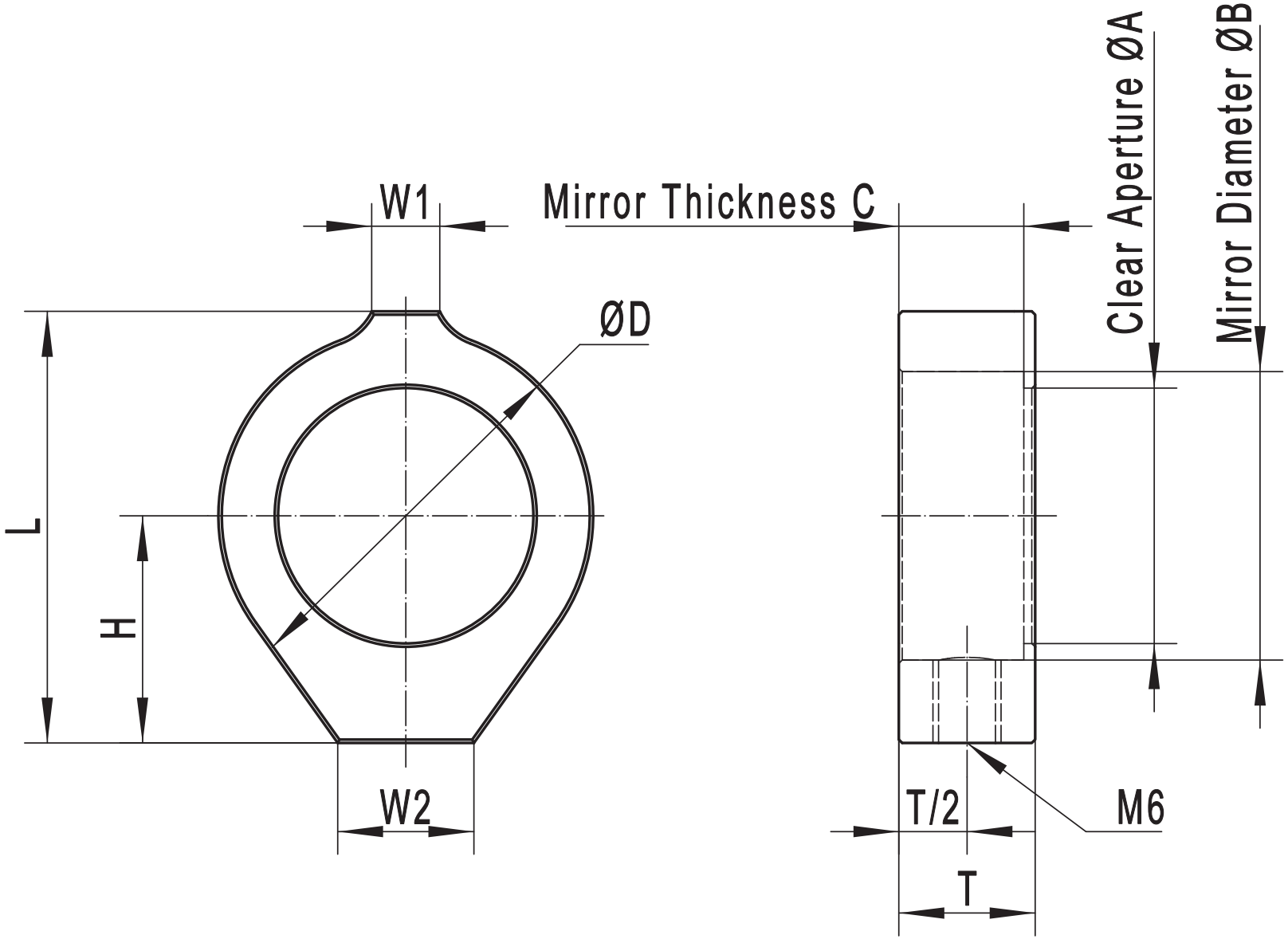
W1
Mirror Thickness C
ØD
L
H
W2
Clear Aperture ØA
Mirror Diameter ØB
T/2
M6
T