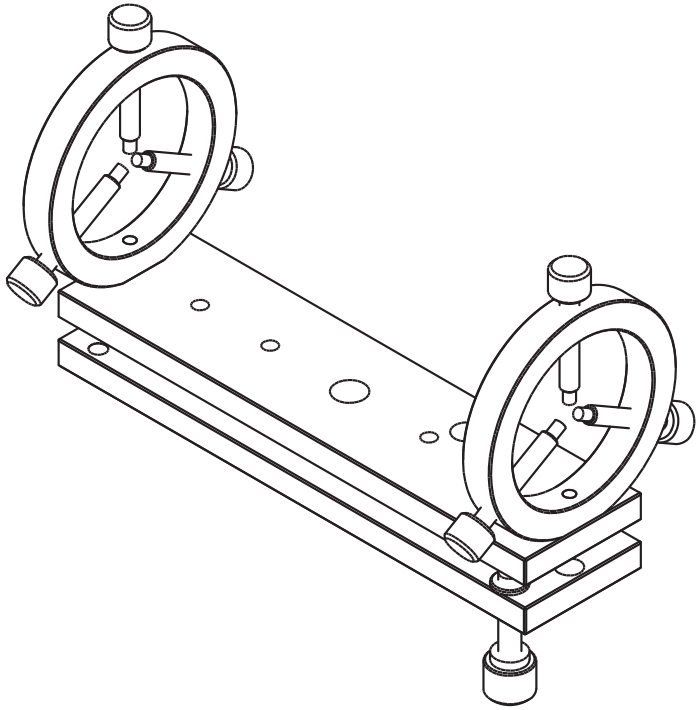

OHLM-1

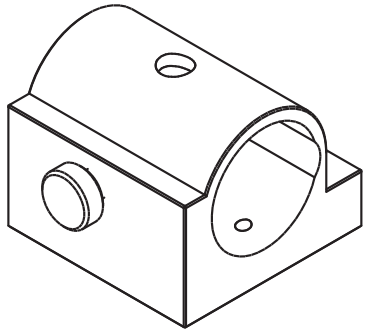

OHLM-2

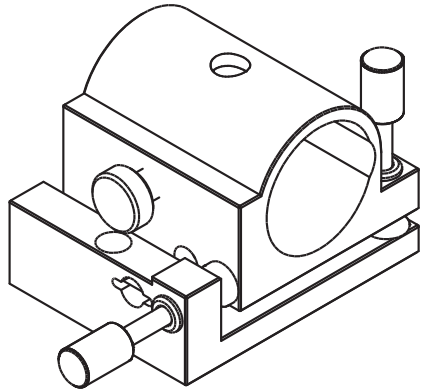

OHLM-3