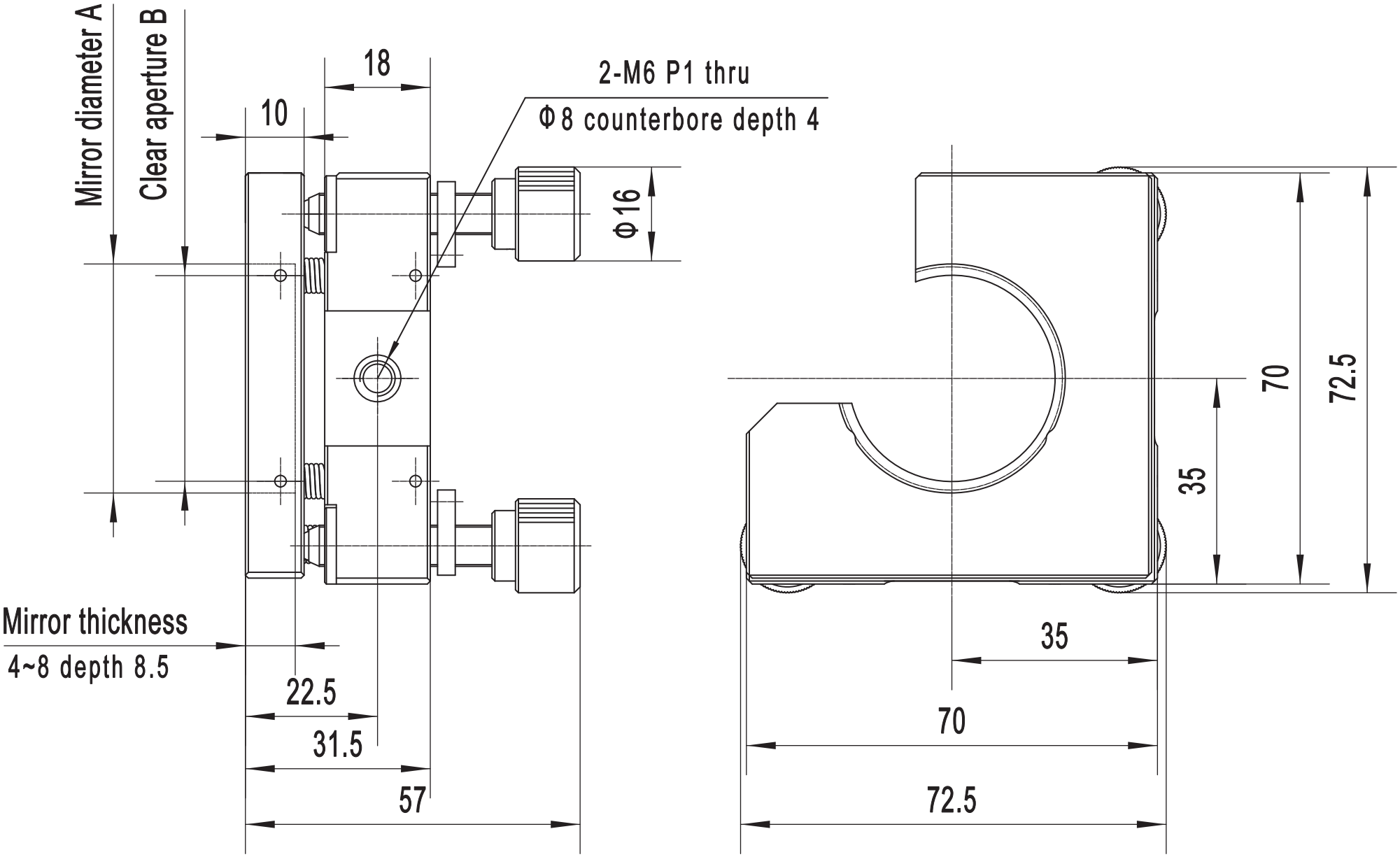
Mirror diameter A
Clear aperture B
18
10
2-M6 P1 thru
Φ8 counterbore depth 4
Φ16
Mirror thickness
4~8 depth 8.5
22.5
31.5
57
70
72.5
35
35
70
72.5